FOR LEASE: 4048 Luke Court, Murfreesboro, TN

- **2,000 – 5,450 Square Feet**
- **Lease Price: $17.75 PSF with $40 - $45 PSF Buildout Allowance**
- **Now Available for tenant build-out with desired floorplan**

New Business Class Office Space

***For More Information Contact*:**

John Harney, License# 221569

Direct: 615.542.0715 Office: 615.896.4045

johnh@parks-group.com

1535 W. Northfield Blvd., Suite 7
Murfreesboro, TN 37129

THE PARKS GROUP
COMMERCIAL REAL ESTATE

www.parks-group.com

SITE
Luke Ct
Fortress Blvd
Mercy Ct
Paschal Dr

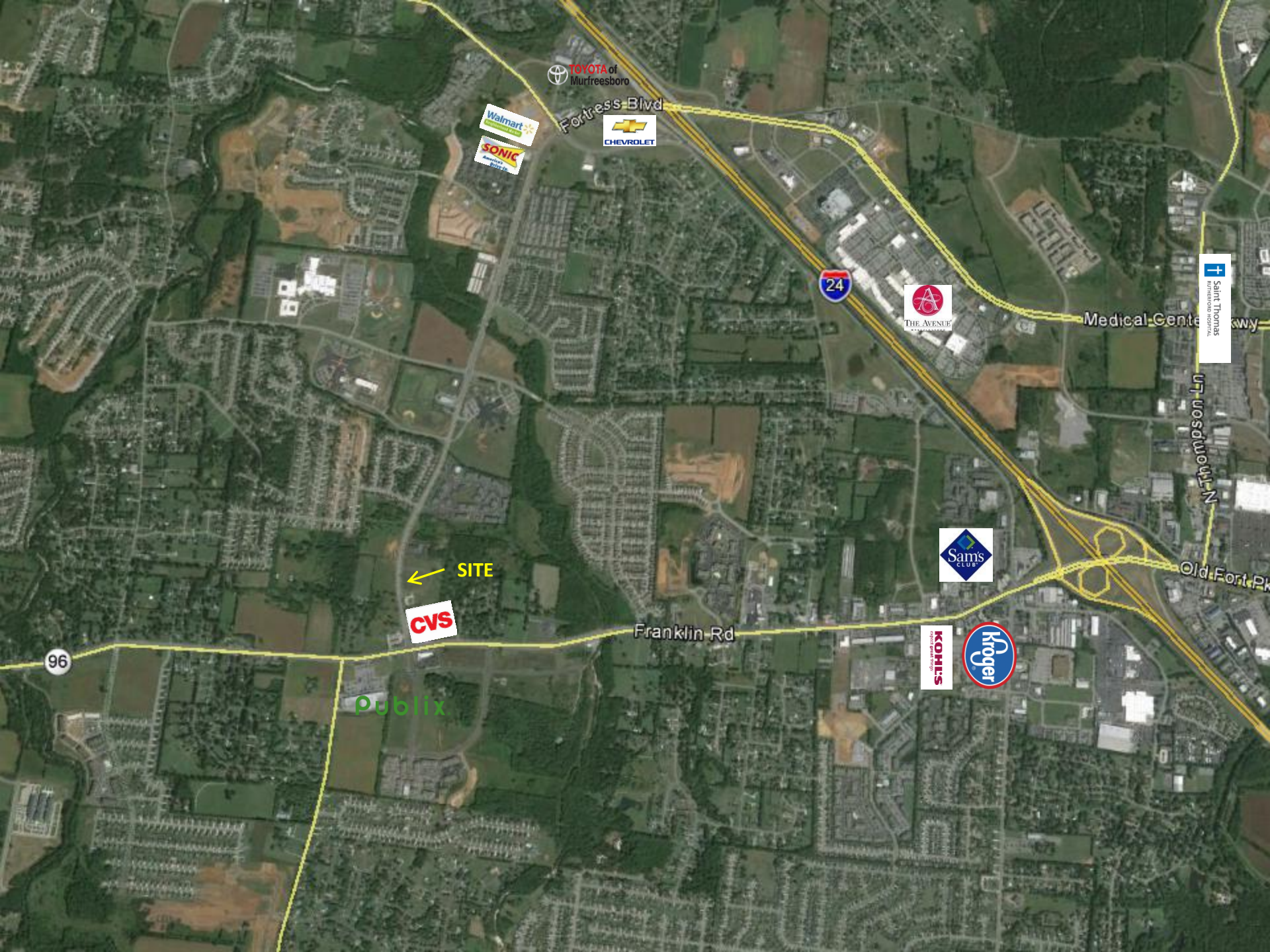
TOYOTA of Murfreesboro
Fortress Blvd
Walmart
SONIC
CHEVROLET
24
THE AVENUE
Saint Thomas RUTHERFORD HOSPITAL
Medical Cente kwy
N Thompson Ln
Sam's CLUB
Old Fort Pk
SITE
CVS
Franklin Rd
96
KOHL'S
Kroger
Publix

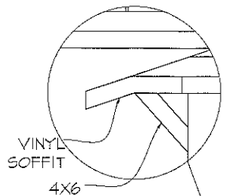

AWNING DETAIL
SCALE: 1/2" = 1'-0"

D SIDE ELEVATION
SCALE: 1/8" = 1'-0"

C SIDE ELEVATION
SCALE: 1/8" = 1'-0"

B REAR ELEVATION
SCALE: 1/8" = 1'-0"

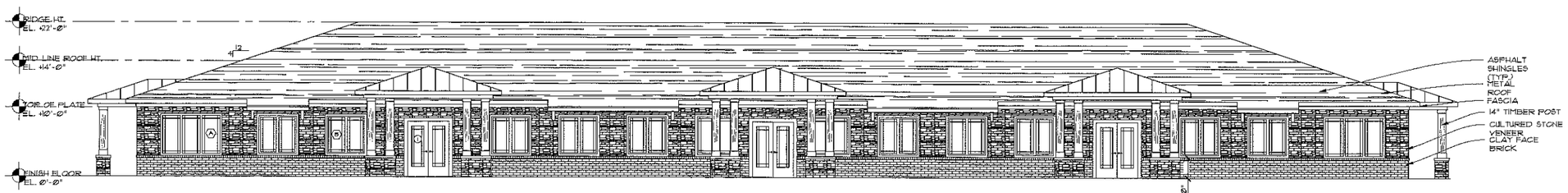

A FRONT ELEVATION
SCALE: 1/8" = 1'-0"

GF55
ARCHITECTS
19 WEST 21
NEW YORK, N Y 10010
212.352.3099
©GF55 Architects, LLP 2011

LEONARD FUSCO REGISTERED ARCHITECT STATE OF TENNESSEE

SPECULATIVE OFFICE BUILDING

4048 LUKE COURT, SUITES A-E
MURFREESBORO, TENNESSEE 37128

OWNER:
HGG RIDGE, LTD
14300 RIDGE ROAD, SUITE 100
N. ROYALTON, OH 44133
440.237.1681

CONTRACTOR:
HGG RIDGE LTD.
14300 RIDGE ROAD, SUITE 100
N. ROYALTON, OH 44133
440.237.1681

DRAWING:
ELEVATIONS, SECTIONS & DETAILS

DATE: MAY 23, 2016

SCALE:
AS NOTED

DRAWN BY:

A-200

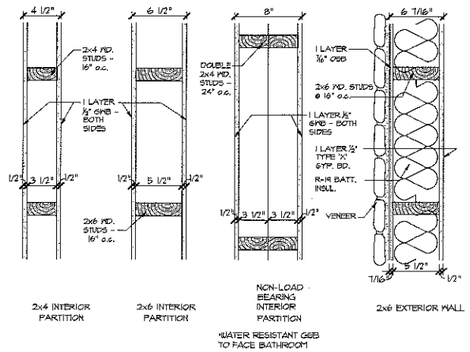

TYP. WALL DETAIL

1 1/2" = 1'-0"

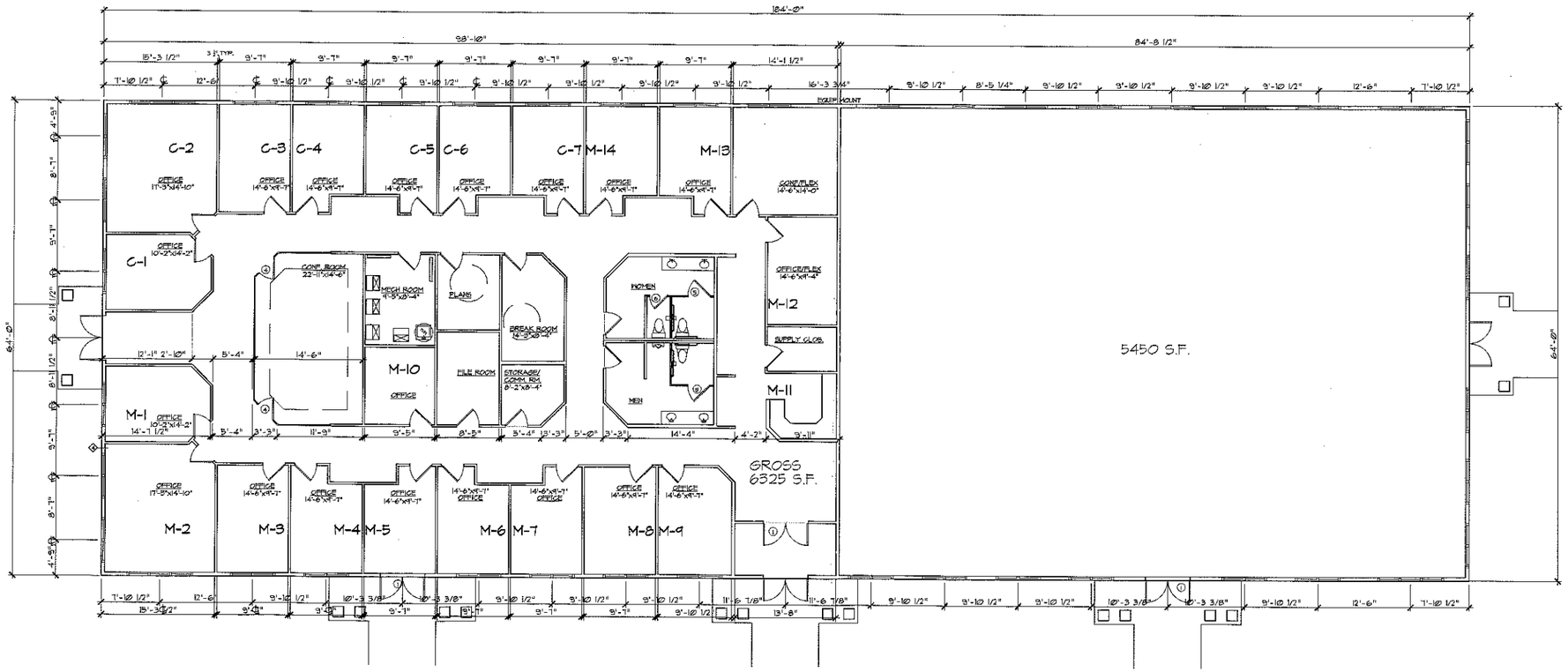

A FLOOR PLAN

SCALE: 1/8" = 1'-0"

GF55 ARCHITECTS
19 WEST 21
NEW YORK, N Y 10010
212.352.3099

©GF55 Architects, LLP 2011

LEONARD FUSCO
REGISTERED ARCHITECT
STATE OF TENNESSEE
NO. 102718
5/23/16

SPECULATIVE OFFICE BUILDING

4048 LUKE COURT, SUITES A-E
MURFREESBORO, TENNESSEE 37128

OWNER:
HGG RIDGE, LTD
14300 RIDGE ROAD, SUITE 100
N. ROYALTON, OH 44133
440.237.1681

CONTRACTOR:
HGG RIDGE LTD.
14300 RIDGE ROAD, SUITE 100
N. ROYALTON, OH 44133
440.237.1681

DRAWING:
FLOOR PLAN

DATE: MAY 23, 2016

SCALE:
AS NOTED

DRAWN BY:

A-101

Rutherford County, TN Community Profile

Rutherford County in the News

96.1

cost of living index vs. National Average of 100

Source: 2016 ACCRA Cost of Living Index

5th

in the U.S. for job growth from Feb. 2015-Feb. 2016

Source: U.S. Bureau of Labor Statistics

13th

fastest growing city in America, between July 1, 2014 and July 1, 2015.

Source: U.S. Department of Commerce

More than 2,700

new jobs were created in 2015 and $667 million in capital investments were made from 5 relocations and 11 existing company expansions.

Destination Rutherford

Destination Rutherford is a 501(c)(6), not-for-profit economic development organization intended to serve all investors as a mechanism that pulls together the collective leadership of the Rutherford county public and private sectors in order to stimulate strategic economic growth.

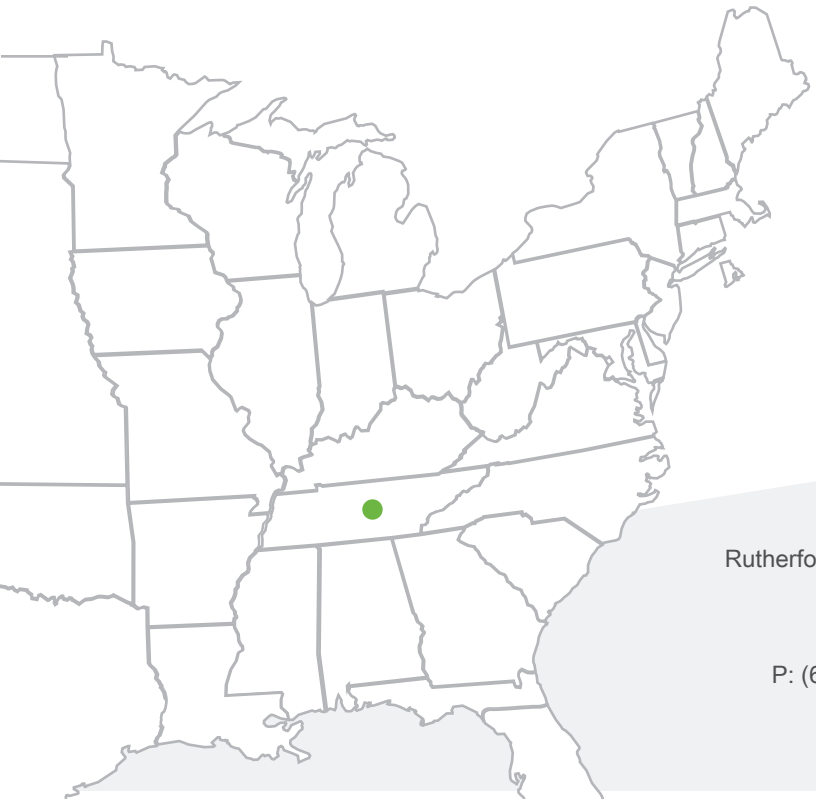

Top 10 Private Sector Employers

Company	Employees
Nissan North America, Inc.	8,400
State Farm Insurance Co.	1,662
Amazon Fulfillment Center	1,550
Ingram Content Group	1,500
Asurion	1,250
St. Thomas Rutherford Hospital	1,100
Verizon Wireless	1,068
General Mills	1,050
Bridgestone Americas, Inc.	1,010
Johnson Controls	1,000
Taylor Farms	920

Rutherford County Chamber of Commerce
3050 Medical Center Pkwy
Murfreesboro, Tennessee 37129

P: (615) 893-6565 | F: (615) 278-2013

rutherford works

Quick Facts

Rutherford County

2016 Population: 299,295
2021 Projection: 325,948
2010 Census: 224,604
Households: 109,563
Avg. HH Income: $72,186
Med. HH Income: $59,164

City of Murfreesboro

2016 Population: 127,140
2021 Projection: 138,139
2010 Census: 108,755
Households: 48,690
Avg. HH Income: $68,912
Med. HH Income: $52,249

Town of Smyrna

2016 Population: 45,865
2021 Projection: 46,699
2010 Census: 39,974
Households: 17,262
Avg. HH Income: $69,114
Med. HH Income: $55,098

City of La Vergne

2016 Population: 37,144
2021 Projections: 40,538
Households: 12,082
Avg. HH Income: $67,749
Med. HH Income: $59,722

City of Eagleville

2016 Population: 668
2021 Projection: 705
2010 Census: 604
Households: 255
Avg. HH Income: $75,314
Med. HH Income: $68,056

Sources:
2016 Claritas Estimate
2010 Census Data
Updated February 22, 2016

TN Dept. of Labor December 2015 Report

Brian D. Hercules
VP, Economic Development
bhercules@rutherfordchamber.org

K. Beth Duffield
VP, Workforce Development
bduffield@rutherfordchamber.org

Updated June 6, 2016

Recent Announcements

Empyrean Benefit Solutions, Inc.

Empyrean Benefit Solutions, Inc. will locate a new customer service center in La Vergne, TN. Empyrean will invest $2.9 million in the new operation, creating 120 jobs in Rutherford County.

Steel Technologies

Steel Technologies will build a new 83,000 square foot facility in Smyrna, TN. Steel Technologies will invest $18 million to build the Smyrna manufacturing facility, the company's second location in Rutherford County, and create 50 new jobs.

TwelveStone Health Partners

Murfreesboro's newest corporate headquarters will be TwelveStone Health Partners, a consolidation of Reeves-Sain Family of Medical Services corporate, logistics billing and service divisions. The company represents $14.9 million in capital investment and will create 200 new jobs.

Education

Middle Tennessee State University
Murfreesboro
Enrollment: 23,881

Motlow College
Smyrna
Enrollment: 1,500

TN College of Applied Technology
Murfreesboro
Enrollment: 414

Rutherford County Schools
92.5% of students graduate within 4 years and one summer.

Murfreesboro City Schools
Rated 7 out of 10 by
www.bestschools.org

2014 Total County Retail Sales
$6,060,253,109
Source: TN Dept. of Revenue

2014 Travel Related Expenditures
$307,470,000
Source: U.S. Travel Association

Rutherford County has developed over 4 million square feet of retail in the last 10 years.

Labor Force At-A-Glance

	Tennessee	Nashville MSA	County
Labor Force	3,121,100	961,220	157,250
Unemployment Rate	3.9%	3.1%	3.0%
Available Labor Pool	120,800	29,470	4,760

TN Dept. of Labor April 2016 Report